SH. 1 OF 1	CAT NO C251C	CUSTOMER DIMENSIONS	DO NOT SEPARATE PRINT FROM WORK	LOT NO

OPER	TOOLS

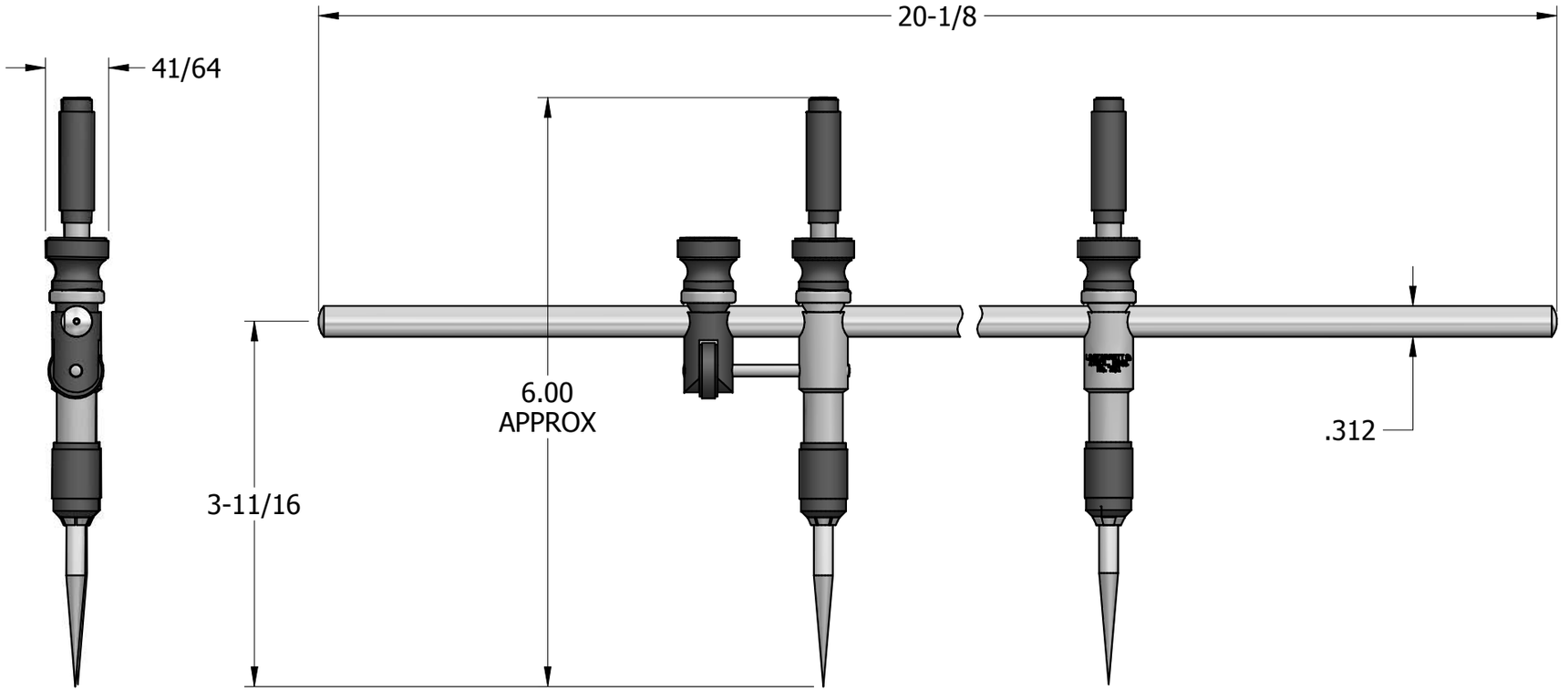

MAX DIVIDING RANGE = 18" (450mm)
MAX CIRCLE DIA RANGE = 36" (900mm)

REV	DESCRIPTION	DATE	BY

DR CAP	CHK	DATE 2/27/15

STEEL BEAM TRAMMEL ASSEMBLY

FRACTIONAL TOLERANCE +- 1/64 UNLESS OTHERWISE NOTED

THE L.S. STARRETT CO.
ATHOL, MASS.